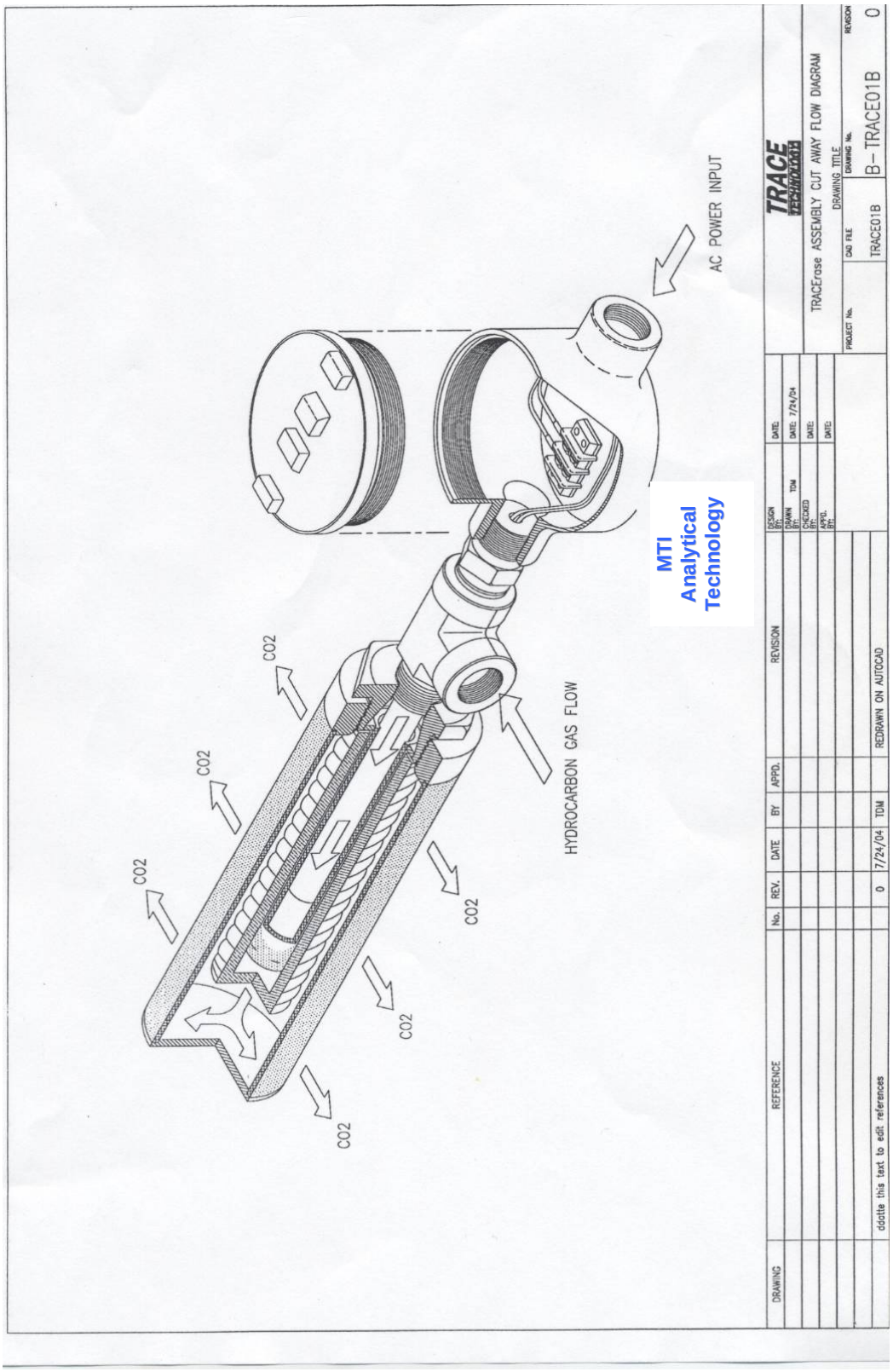
AC POWER INPUT
HYDROCARBON GAS FLOW
CO2
CO2
CO2
CO2
CO2
CO2
MTI
Analytical
Technology
DRAWING
REFERENCE
No.
REV.
DATE
BY
APPD.
REVISION
DESIGN BY:
DRAWN BY:
TDM
CHECKED BY:
APPVL. BY:
DATE:
DATE: 7/24/04
DATE:
DATE:
ddotte this text to edit references
0
7/24/04
TDM
REDRAWN ON AUTOCAD
TRACE
TRACErase ASSEMBLY CUT AWAY FLOW DIAGRAM
DRAWING TITLE
PROJECT No.
CAD FILE
TRACE01B
DRAWING No.
B-TRACE01B
REVISION
0